EED 101 INTRODUCTION TO ELECTRICAL ENGINEERING

SPRING 2017 **INSTRUCTOR: DR G NAVEEN BABU**

PROBLEM SET 9

Reference text: J. David Irwin, R. Mark Nelms-Basic Engineering Circuit Analysis-Wiley (2008) 9TH EDITION

4.9 Assuming an ideal op-amp, determine the voltage gain of the circuit in Fig. P4.9.

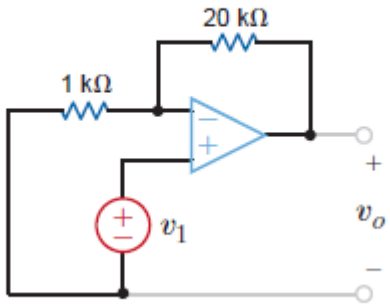

Figure P4.9

$$A_v = 1 + \frac{20k}{1k} = 21$$

4.11 Assuming an ideal op-amp in Fig. P4.11, determine the value of R_X that will produce a voltage gain of 26.

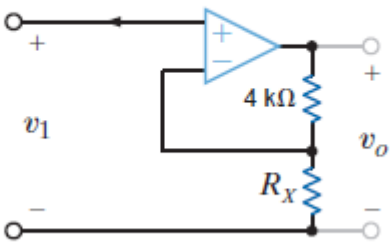

Figure P4.11

$$A_v = 1 + \frac{4k}{R_x}$$

$$26 = 1 + \frac{4k}{R_x}$$

$$25 = \frac{4k}{R_x}$$

$$R_x = \frac{4k}{25}$$

$$= 160\,\Omega$$

4.13 Assuming an ideal op-amp in Fig. P4.13, determine the output voltage V_o.

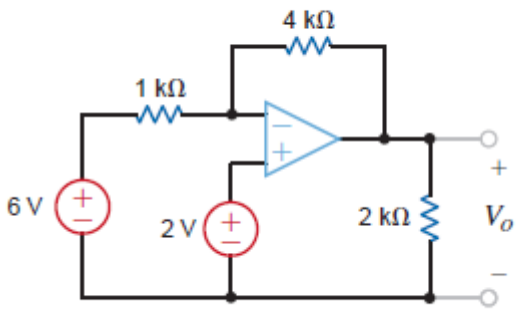

Figure P4.13

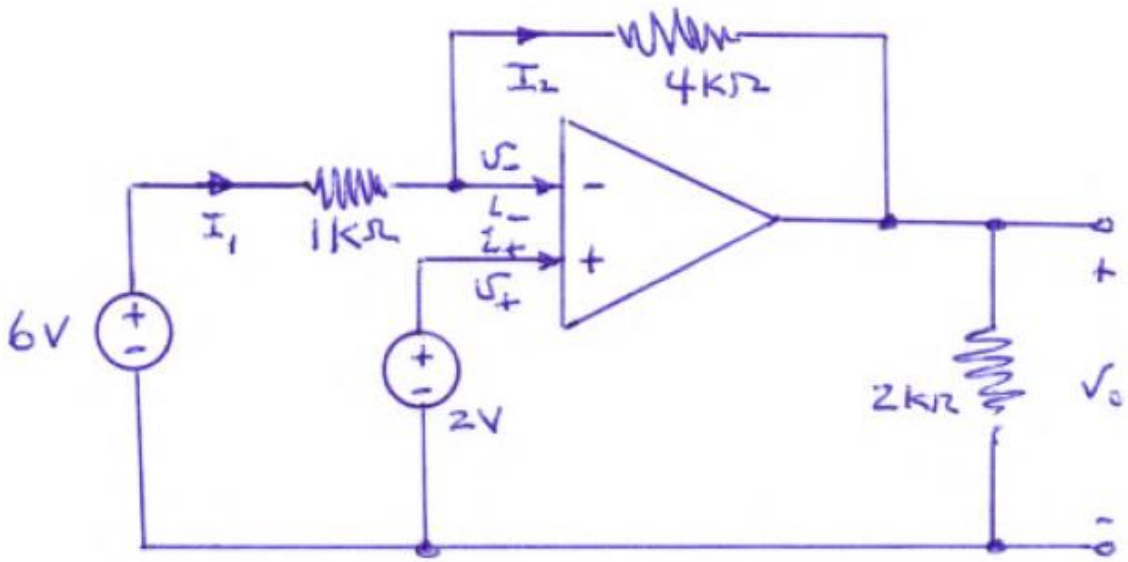

Applying the op-amp rules:

(1) $v_- = v_+$, yields $v_- = 2V$ since $v_+ = 2V$.
Then $I_1 = (6 - 2)/1K = 4$ mA and the voltage drop across the 1K Ohm resistor is 4V

(2) Since $i_- = i_+ = 0$, then $I_2 = 4$ mA
As a result, the voltage drop across the 4K Ohm resistor is 16V

Now applying KVL to the outer loop yields

$-6 + 4 + 16 + V_0 = 0$ and therefore $V_0 = -14V$

4.19 The op-amp in the amplifier in Fig. P4.19 operates with ±15 V supplies and can output no more than 200 mA. What is the maximum gain allowable for the amplifier if the maximum value of V_S is 1 V?

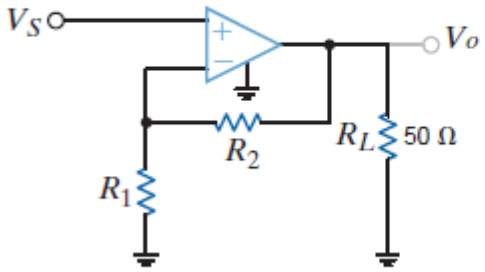

$R_1 + R_2 = 10$ kΩ

Figure P4.19

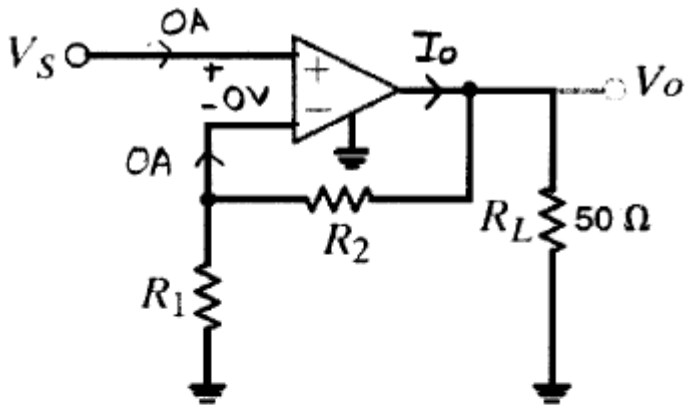

$$R_1 + R_2 = 10\,K\Omega$$

Non-inverting op-amp:

$$\frac{V_o}{V_s} = 1 + \frac{R_2}{R_1}$$

$$\frac{V_o}{V_s} = \frac{R_1 + R_2}{R_1}$$

$$\frac{V_o}{V_s} = \frac{10 \times 10^3}{R_1}$$

Putting voltage limitation:

$$V_o = \left(\frac{10 \times 10^3}{R_1}\right) V_s \leq 15$$

$$\boxed{R_1 \geq 666\,\Omega}$$

$$V_s = 1\,V$$

$$V_o = \frac{10 \times 10^3}{R_1}$$

$$I_o = \frac{V_o}{R_1+R_2} + \frac{V_o}{50} = \frac{1}{R_1} + \frac{10\times10^3}{50R_1}$$

$$R_1+R_2 = 10\times10^3$$

$$\frac{1}{R_1}(201) \leq 200\times10^{-3} \quad \text{(applying current limit)}$$

$$R_1 \geq 1005\ \Omega \quad \text{for } I_o \leq 200\,mA$$

$$R_2 \leq 8995\ \Omega$$

$R_1 >= 1005$ satisfies the correct value to limit V_o and I_o, hence this value is chosen.

$$A_V = 1+\frac{R_2}{R_1} = 1+\frac{8995}{1005} = 9.95$$

$$R_1 = 1005\ \Omega$$

$$R_2 = 8995\ \Omega$$

$$A_V = 9.95$$

4.23 The network in Fig. P4.23 is a current-to-voltage converter or transconductance amplifier. Find v_o/i_S for this network.

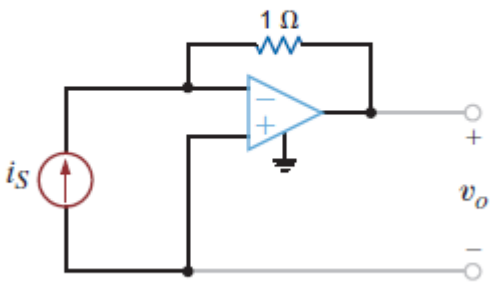

Figure P4.23

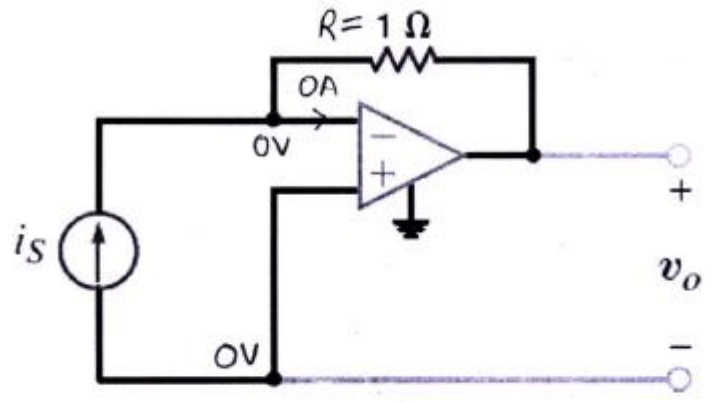

KCL at V^- : $i_s = 0 + \frac{0 - V_o}{R}$

$$i_s = \frac{-V_o}{R}$$

$$\frac{V_o}{i_s} = -R$$

$$\frac{V_o}{i_s} = -1$$

4.42 Find v_o in the circuit in Fig. P4.42.

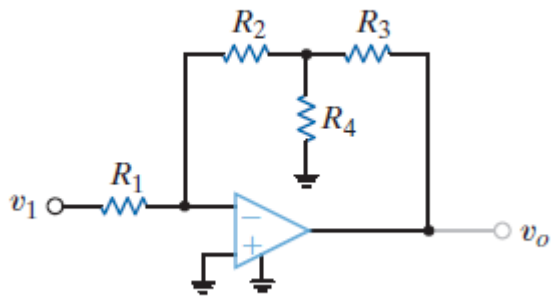

Figure P4.42

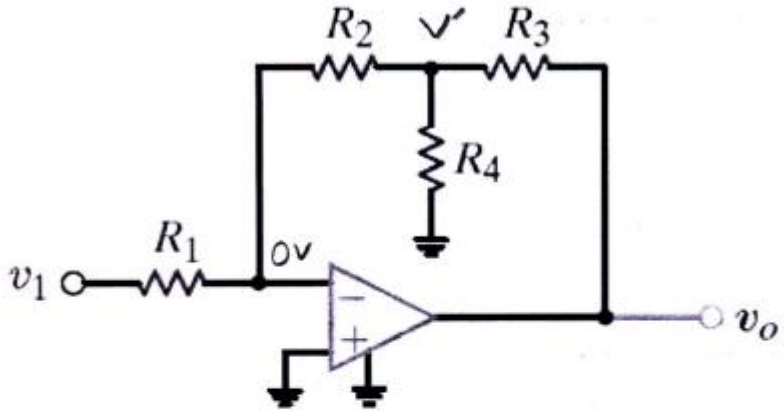

KCL at V_- : $\dfrac{V_1}{R_1} + \dfrac{V'}{R_2} = 0$

$$V' = -\frac{R_2}{R_1} V_1$$

KCL at V' : $\dfrac{V'}{R_2} + \dfrac{V'}{R_4} + \dfrac{V' - V_o}{R_3} = 0$

$$V_o = \left(\frac{R_3}{R_2} + \frac{R_3}{R_4} + 1 \right) V'$$

$$V_o = \left(\frac{R_3}{R_2} + \frac{R_3}{R_4} + 1 \right) \left(\frac{-R_2}{R_1} \right) V_1$$

4.43 Find the output voltage, v_o, in the circuit in Fig. P4.43.

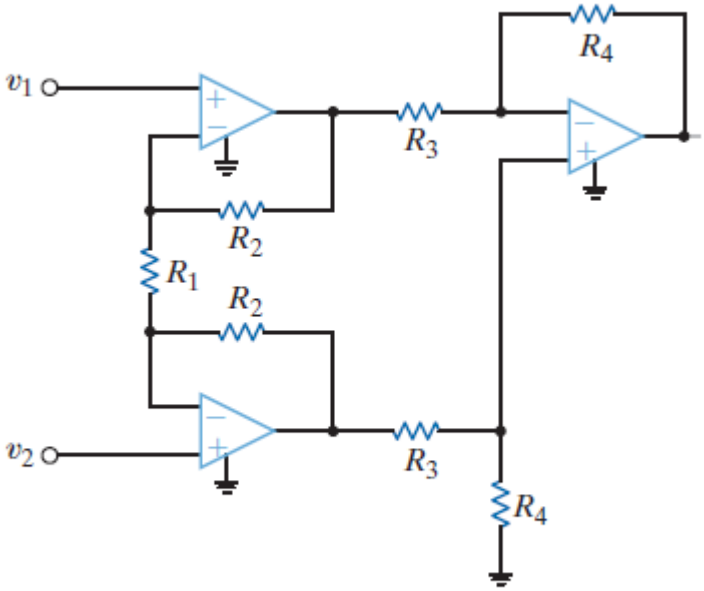

Figure P4.43

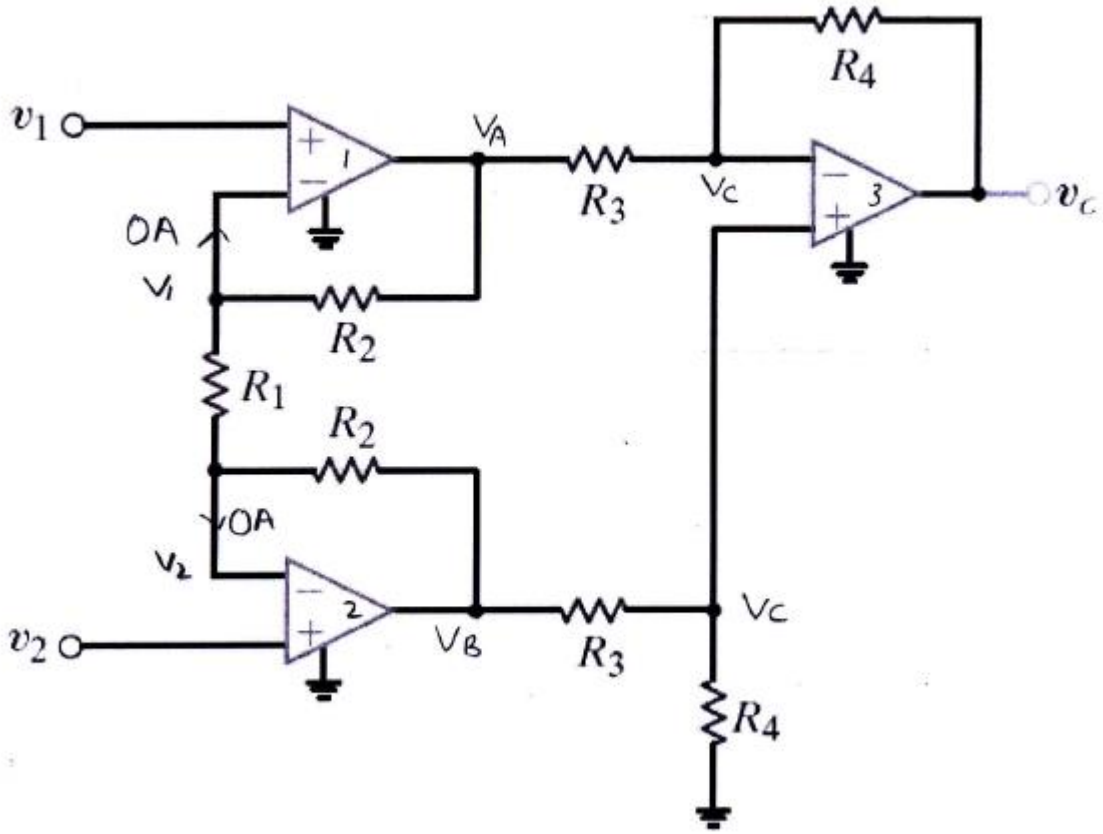

KCL at V- of op- amp 1:

$$\frac{V_A - V_1}{R_2} = \frac{V_1 - V_2}{R_1}$$

$$V_A = \frac{V_1 - V_2}{R_1} R_2 + V_1$$

$$V_A = \left(1 + \frac{R_2}{R_1}\right) V_1 - \frac{R_2}{R_1} V_2$$

KCL at V- of op-amp 2:

$$\frac{V_B - V_2}{R_2} = \frac{V_2 - V_1}{R_1}$$

$$V_B = \frac{-V_1}{R_1} R_2 + \frac{V_2}{V_1} R_2 + V_2$$

$$V_B = -\frac{R_2}{R_1} V_1 + \left(1 + \frac{R_2}{R_1}\right) V_2$$

KCL at V+ of op-amp 3:

$$\frac{V_B - V_C}{R_3} = \frac{V_C}{R_4}$$

$$V_C\left(\frac{1}{R_4}+\frac{1}{R_3}\right) = \frac{V_B}{R_3}$$

$$V_C = \left(\frac{R_4}{R_3+R_4}\right) V_B$$

KCL at V_- of op-amp 3:

$$\frac{V_A-V_C}{R_3} + \frac{V_O-V_C}{R_4} = 0$$

$$V_O = \frac{-V_A}{R_3} R_4 + \frac{V_C}{R_3} R_4 + V_C$$

$$V_O = \frac{-R_4}{R_3} V_A + \left(1+\frac{R_4}{R_3}\right) V_C$$

$$V_O = \frac{-R_4}{R_3}\left[\left(1+\frac{R_2}{R_1}\right)V_1 - \frac{R_2}{R_1}V_2\right]$$

$$+\left(1+\frac{R_4}{R_3}\right)\left(\frac{R_4}{R_3+R_4}\right)\left[-\frac{R_2}{R_1}V_1+\left(1+\frac{R_2}{R_1}\right)V_2\right]$$

$$V_O = \frac{R_4}{R_3}\left(1+2\frac{R_2}{R_1}\right)(V_2-V_1)$$

4.44 The electronic ammeter in Example 4.9 has been modified and is shown in Fig. P4.44. The selector switch allows the user to change the range of the meter. Using values for R_1 and R_2 from Example 4.9, find the values of R_A and R_B that will yield a 10-V output when the current being measured is 100 mA and 10 mA, respectively.

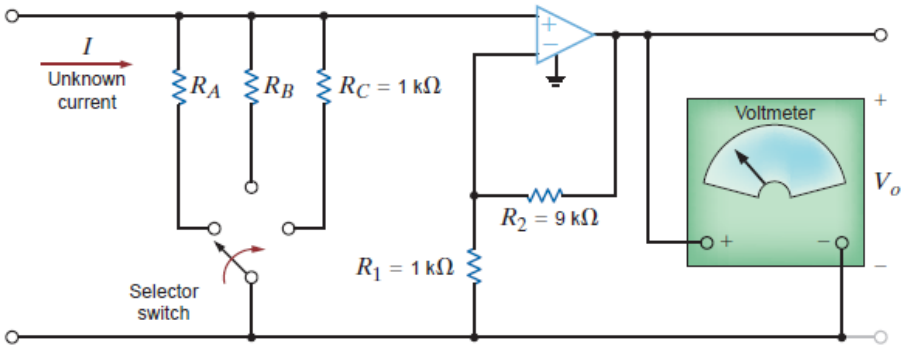

Figure P4.44

Non-inverting op-amp:

$$V_o = \left(1 + \frac{R_2}{R_1}\right) V' = 10V'$$

$$V' = IR_A = 0.1R_A$$

$$V_o = 10V'$$

$$V_o = 10(0.1R_A) = 10$$

$$R_A = 10\Omega$$

$$V' = IR_B = 0.01R_B$$

$$V_o = 10V' = 10(0.01R_B) = \frac{R_B}{10}$$

$$\frac{R_B}{10} = 10$$

$$R_B = 100\,\Omega$$

4.47 Design a two-stage op-amp network that has a gain of $-50{,}000$ while drawing no current into its input terminal. Use no resistors smaller than 1 kΩ.

For no input current, a non-inverting op-amp can be used

For a negative value, an inverting op-amp can be used

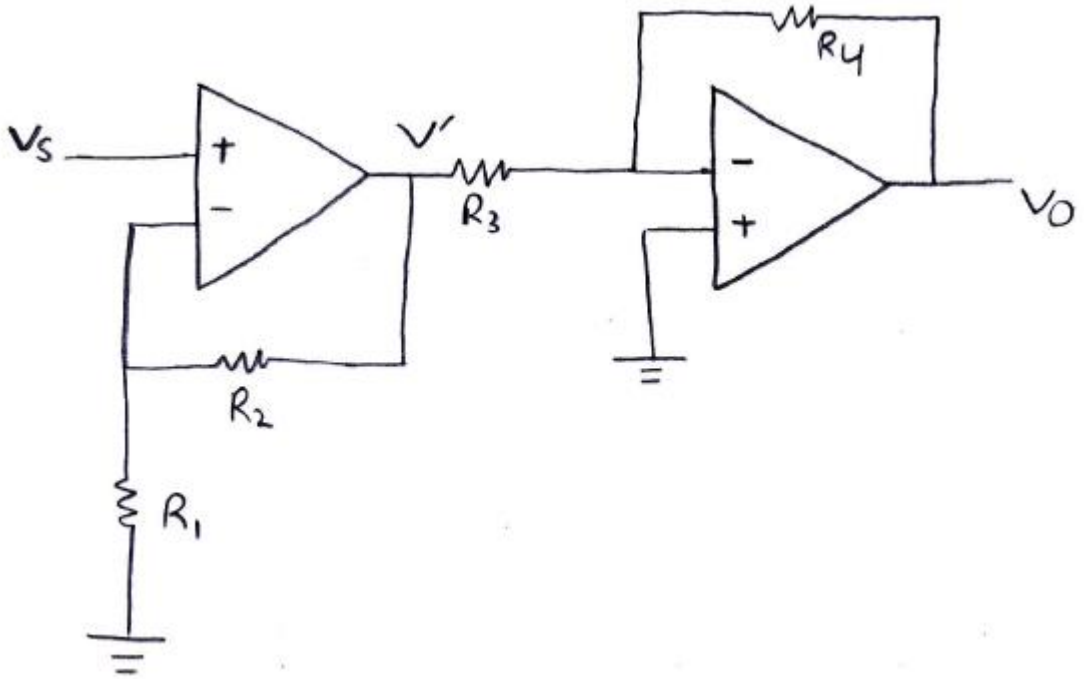

$$\frac{V'}{V_S} = 1 + \frac{R_2}{R_1}$$

$$\frac{V_o}{V'} = -\frac{R_4}{R_3}$$

$$\frac{V_o}{V_S} = -\frac{R_4}{R_3}\left(1 + \frac{R_2}{R_1}\right)$$

Select $\frac{V_x}{V_S} = 250$

and $\frac{V_o}{V_x} = -200$

$R_2 = 498\ K\Omega$

$R_1 = R_3 = 2\ K\Omega$

$-200 = \frac{-R_4}{2000}$

$250 = 1 + \frac{R_2}{2000}$

$R_4 = 400\ K\Omega$

4.53 Show that the circuit in Fig. P4.53 can produce the output

$$V_o = K_1V_1 - K_2V_2$$

only for $0 \le K_1 \le K_2 + 1$.

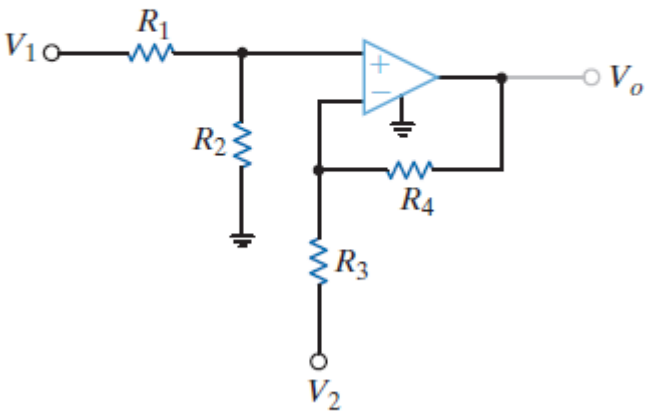

Figure P4.53

$$V_o = K_1V_1 - K_2V_2$$

$$0 \le K_1 \le K_2 + 1$$

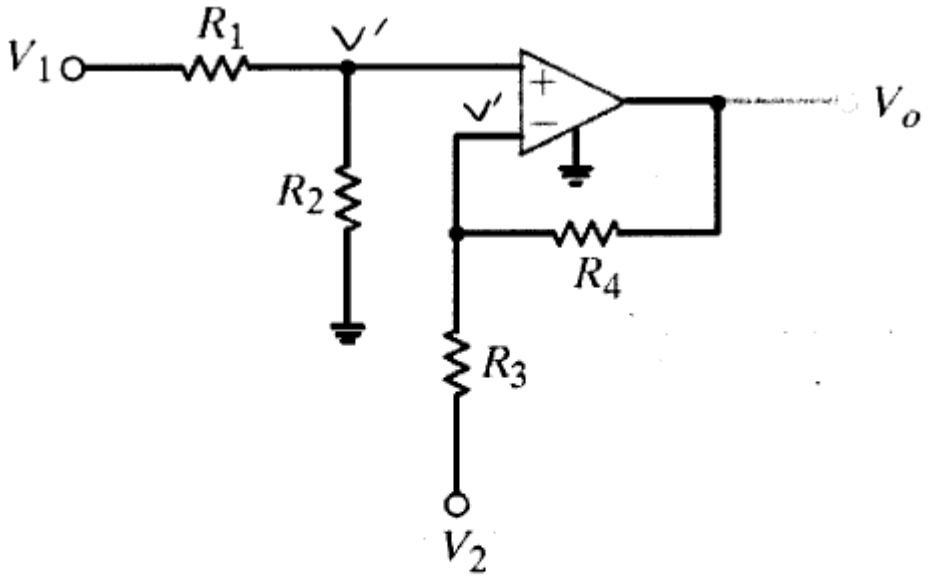

KCL at V_+ : $\dfrac{V_1 - V'}{R_1} = \dfrac{V'}{R_2}$

$$V'\left(\frac{1}{R_1}+\frac{1}{R_2}\right) = \frac{V_1}{R_1}$$

$$V' = \left(\frac{R_2}{R_1+R_2}\right)V_1$$

KCL at V_- : $\dfrac{V_0-V'}{R_4} = \dfrac{V'-V_2}{R_3}$

$$V_0 = \left(\frac{1}{R_3}+\frac{1}{R_4}\right)R_4V' - \frac{R_4}{R_3}V_2$$

$$V_0 = \left(1+\frac{R_4}{R_3}\right)V' - \frac{R_4}{R_3}V_2$$

$$V_0 = \left(1+\frac{R_4}{R_3}\right)\left(\frac{R_2}{R_1+R_2}\right)V_1 - \frac{R_4}{R_3}V_2$$

$$V_0 = K_1V_1 - K_2V_2$$

$$K_2 = \frac{R_4}{R_3}$$

If $R_2 = 0\,\Omega$, $K_1 = 0$

If $R_2 \neq 0\,\Omega$ and $R_1 = 0\,\Omega$

$$K_1 = 1 + \frac{R_4}{R_3}$$

$$K_1 = 1 + K_2$$

$$0 \leq K_1 \leq K_2 + 1$$

4PFE-2 Determine the output voltage V_o of the summing op-amp circuit shown in Fig. 4PFE-2.

a. 6 V b. 18 V

c. 9 V d. 10 V

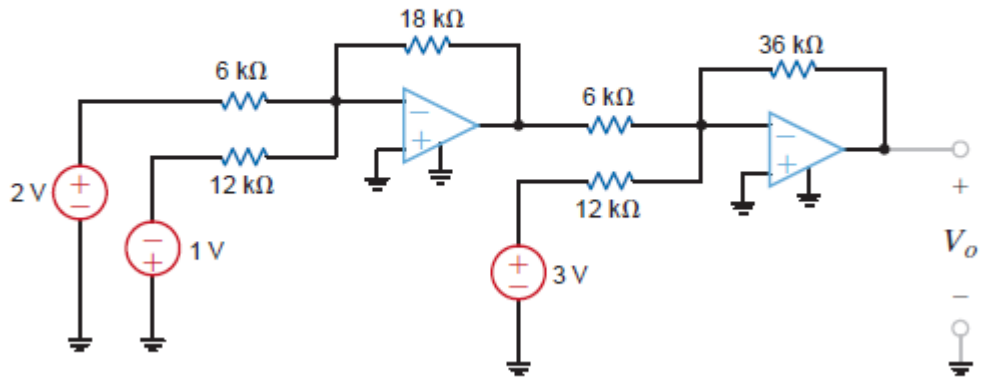

Figure 4PFE-2

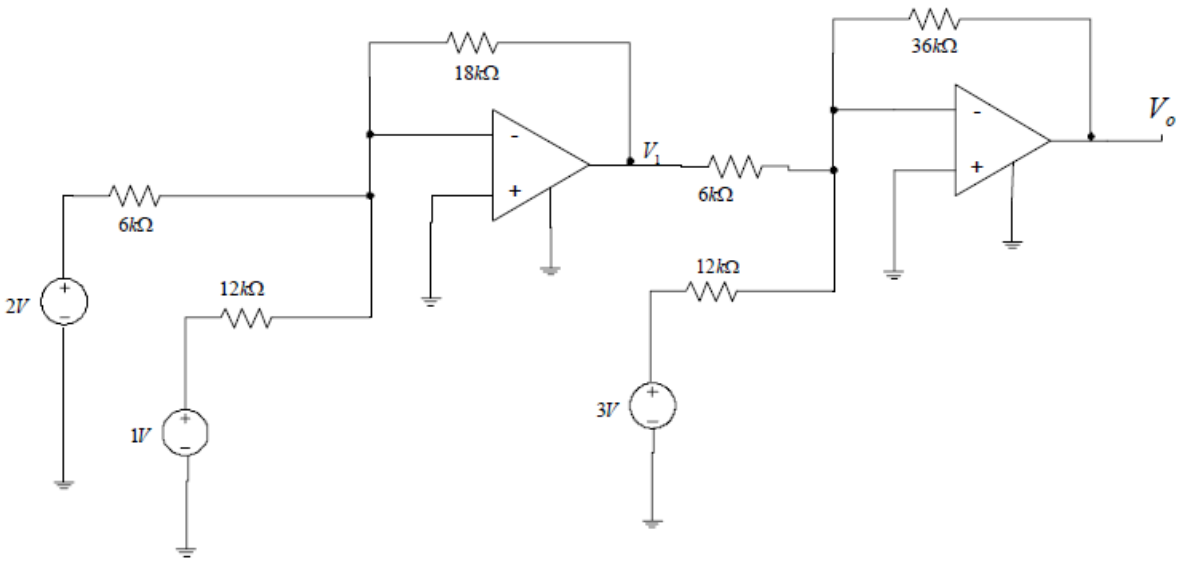

$$V_1 = -2\left(\frac{18k}{6k}\right)(4) + 1\left(\frac{18k}{12k}\right) = -4.5V$$

$$V_0 = -V_1\left(\frac{36k}{6k}\right) - 3\left(\frac{36k}{12k}\right)$$

$$V_0 = 4.5\left(\frac{36k}{6k}\right) - 3\left(\frac{36k}{12k}\right)$$

$$V_0 = 18V$$

4PFE-5 What is the voltage V_o in the circuit in Fig. 4PFE-5?

a. 3 V

b. 6 V

c. 8 V

d. 5 V

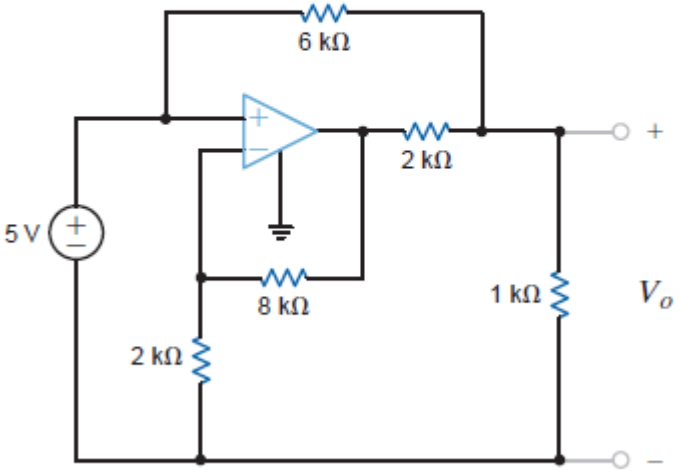

Figure 4PFE-5

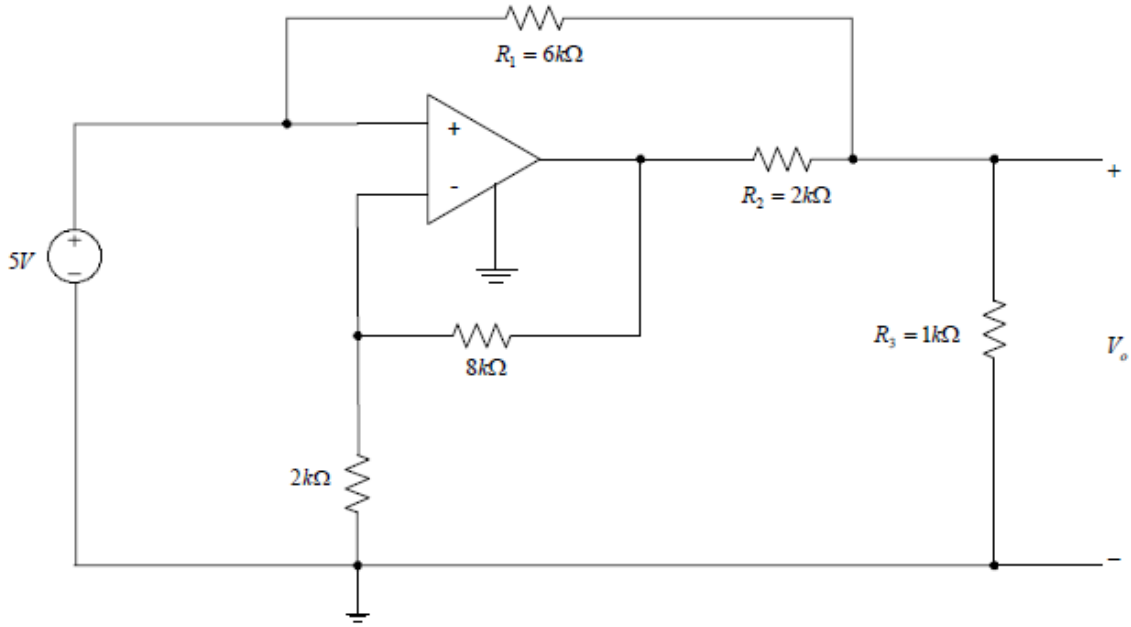

The 8kΩ and 2kΩ resistors make up a noninverting op-amp.

$$V_1 = \left(1 + \frac{8k}{2k}\right)5 = 25V$$

Use nodal analysis at node A:

$$\frac{V_o}{R_3} + \frac{V_o - V_i}{R_1} + \frac{V_o - 25}{2k} = 0$$

$$\frac{V_o}{1k} + \frac{V_o - 5}{6k} + \frac{V_o - 25}{2k} = 0$$

$$6V_o + V_o - 5 + 3V_o - 75 = 0$$

$$10V_o = 80$$

$$V_o = 8V$$